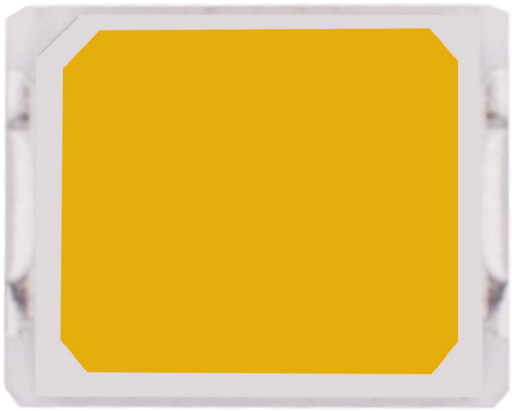

Bridgelux® SMD 2835 0.5W 3V

Product Data Sheet DS201

BXEN-27X | 30X | 35X | 40X | 50X | 57X | 65X

Introduction

SMD 2835

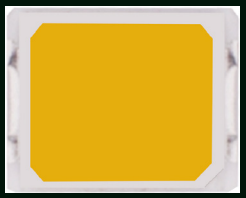

The Bridgelux SMD 2835 mid power LED is hot-color targeted, which ensures that the LEDs fall within their specified color bin at the typical application conditions of 85˚C. With its broad lumen coverage and wide range of CCT options, the SMD 2835 provides unparalleled design-in flexibility for indoor and outdoor lighting applications. The SMD 2835 is ideal as a drop-in replacement for emitters with an industry standard 2.8mm x 3.5mm footprint.

Features

- Industry-standard 2835 footprint
- 9 bin color control enables tight color control
- Hot-color targeting ensures that color is within the ANSI bin at the typical application conditions of 85˚C
- Enables 3- and 5-step MacAdam ellipse custom binning kits
- RoHS compliant and Pb free
- Multiple CCT configurations for a wide range of lighting applications

Benefits

- Lower operating and manufacturing cost
- Ease of design and rapid go-to-market
- Uniform consistent white light
- Reliable and constant white point
- Environmentally friendly, complies with standards
- Design flexibility

Pb free RoHS

Contents

Product Feature Map	2
Product Nomenclature	2
Product Test Conditions	2
Product Selection Guide	3
Electrical Characteristics	4
Absolute Maximum Ratings	5
Product Bin Definitions	6
Performance Curves	9
Typical Radiation Pattern	12
Typical Color Spectrum	13
Mechanical Dimensions	14
Reliability	15
Reflowing Characteristics	16
Packaging	17
Design Resources	19
Precautions	19
Disclaimers	19
About Bridgelux	20

Product Feature Map

Bridgelux SMD LED products come in industry standard package sizes and follow ANSI binning standards. These LEDs are optimized for cost and performance, helping to ensure highly competitive system lumen per dollar performance while addressing the stringent efficacy and reliability standards required for modern lighting applications.

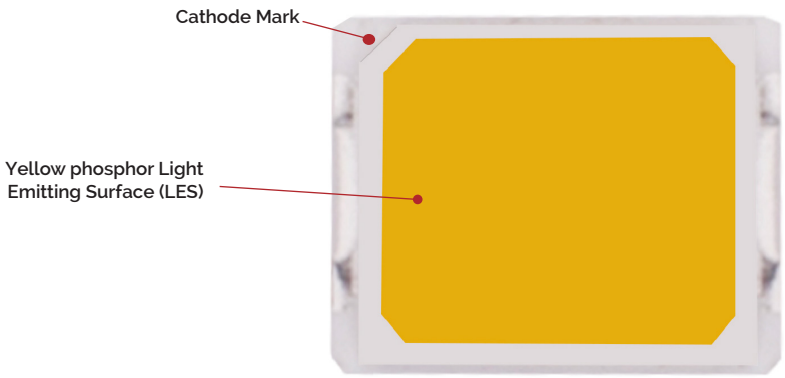

Product Nomenclature

The part number designation for Bridgelux SMD 2835 is explained as follows:

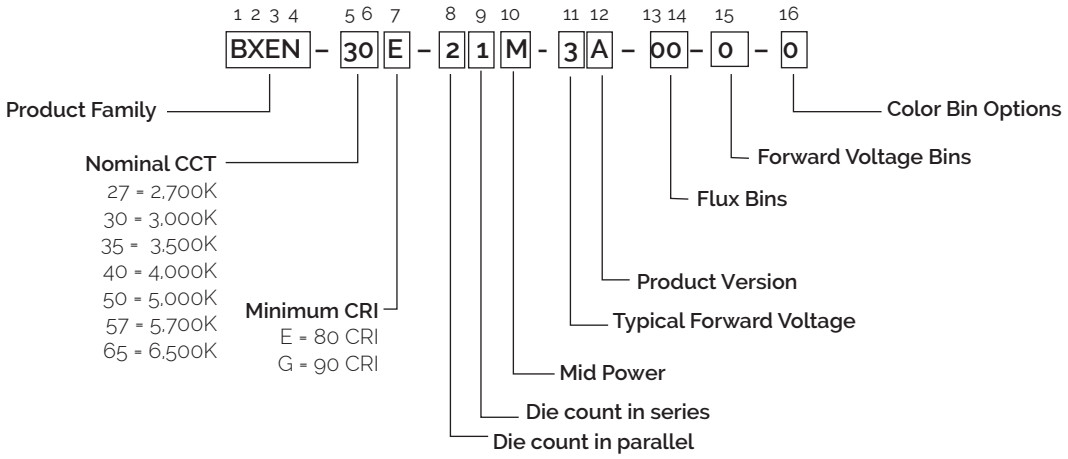

Product Test Conditions

Bridgelux SMD 2835 LEDs are tested and binned with a 10ms pulse of 150mA at T_j (junction temperature)=T_{sp} (solder point temperature) =25˚C. Forward voltage and luminous flux are binned at a T_j=T_{sp}=25˚C.

Product Selection Guide

The following product configurations are available:

Table 1: Selection Guide, Pulsed Measurement Data at 150mA (T_j=T_{sp}=25˚C)

Part Number[1,6]	Nominal CCT[2] (K)	CRI[3,5]	Nominal Drive Current (mA)	Forward Voltage[4,5] (V)			Typical Pulsed Flux (lm)[4,5]	Typical Power (W)	Typical Efficacy (lm/W)
				Min	Typical	Max			
BXEN-27E-21M-3A-00-0-0	2700	80	150	2.8	3.1	3.4	59.0	0.5	127
BXEN-27G-21M-3A-00-0-0	2700	90	150	2.8	3.1	3.4	51.0	0.5	110
BXEN-30E-21M-3A-00-0-0	3000	80	150	2.8	3.1	3.4	62.0	0.5	133
BXEN-30G-21M-3A-00-0-0	3000	90	150	2.8	3.1	3.4	54.0	0.5	116
BXEN-35E-21M-3A-00-0-0	3500	80	150	2.8	3.1	3.4	62.0	0.5	133
BXEN-35G-21M-3A-00-0-0	3500	90	150	2.8	3.1	3.4	54.0	0.5	116
BXEN-40E-21M-3A-00-0-0	4000	80	150	2.8	3.1	3.4	67.0	0.5	144
BXEN-40G-21M-3A-00-0-0	4000	90	150	2.8	3.1	3.4	56.0	0.5	120
BXEN-50E-21M-3A-00-0-0	5000	80	150	2.8	3.1	3.4	67.0	0.5	144
BXEN-50G-21M-3A-00-0-0	5000	90	150	2.8	3.1	3.4	56.0	0.5	120
BXEN-57E-21M-3A-00-0-0	5700	80	150	2.8	3.1	3.4	67.0	0.5	144
BXEN-57G-21M-3A-00-0-0	5700	90	150	2.8	3.1	3.4	56.0	0.5	120
BXEN-65E-21M-3A-00-0-0	6500	80	150	2.8	3.1	3.4	66.0	0.5	142

Table 2: Selection Guide, Pulsed Test Performance (T_{sp} = 85˚C)[7,8]

Part Number[1,6]	Nominal CCT[2] (K)	CRI[3,5]	Nominal Drive Current (mA)	Forward Voltage[5] (V)			Typical DC Flux (lm)[5]	Typical Power (W)	Typical Efficacy (lm/W)
				Min	Typical	Max			
BXEN-27E-21M-3A-00-0-0	2700	80	150	2.7	3.0	3.3	53.0	0.5	117
BXEN-27G-21M-3A-00-0-0	2700	90	150	2.7	3.0	3.3	45.8	0.5	101
BXEN-30E-21M-3A-00-0-0	3000	80	150	2.7	3.0	3.3	55.6	0.5	122
BXEN-30G-21M-3A-00-0-0	3000	90	150	2.7	3.0	3.3	48.4	0.5	107
BXEN-35E-21M-3A-00-0-0	3500	80	150	2.7	3.0	3.3	55.6	0.5	122
BXEN-35G-21M-3A-00-0-0	3500	90	150	2.7	3.0	3.3	48.4	0.5	107
BXEN-40E-21M-3A-00-0-0	4000	80	150	2.7	3.0	3.3	60.2	0.5	132
BXEN-40G-21M-3A-00-0-0	4000	90	150	2.7	3.0	3.3	50.3	0.5	111
BXEN-50E-21M-3A-00-0-0	5000	80	150	2.7	3.0	3.3	60.2	0.5	132
BXEN-50G-21M-3A-00-0-0	5000	90	150	2.7	3.0	3.3	50.3	0.5	111
BXEN-57E-21M-3A-00-0-0	5700	80	150	2.7	3.0	3.3	60.2	0.5	132
BXEN-57G-21M-3A-00-0-0	5700	90	150	2.7	3.0	3.3	50.3	0.5	111
BXEN-65E-21M-3A-00-0-0	6500	80	150	2.7	3.0	3.3	58.7	0.5	129

Notes for Table 1 & 2:

1. The last 6 characters (including hyphens '-') refer to flux bins, forward voltage bins, and color bin options, respectively. "00-0-00" denotes the full distribution of flux, forward voltage, and 7 SDCM color.

   Example: BXEN-30E-21M-3A-00-0-0 refers to the full distribution of flux, forward voltage, and color within a 3000K 7-step ANSI standard chromaticity region with a minimum of 80CRI, 2x1 die configuration, mid power, 3.1V typical forward voltage.
2. Product CCT is hot targeted at T_{sp} = 85˚C. Nominal CCT as defined by ANSI C78.377-2011.
3. Listed CRIs are minimum values and include test tolerance.
4. Products tested under pulsed condition (10ms pulse width) at nominal drive current where T_j=T_{sp}=25˚C.
5. Bridgelux maintains a ±7.5% tolerance on luminous flux measurements, ±0.1V tolerance on forward voltage measurements, and ±2 tolerance on CRI measurements for the SMD 2835.
6. Refer to Table 6 and Table 7 for Bridgelux SMD 2835 Luminous Flux Binning and Forward Voltage Binning information.
7. Typical stabilized DC performance values are provided as reference only and are not a guarantee of performance.
8. Typical performance is estimated based on operation under DC (direct current) with LED emitter mounted onto a heat sink with thermal interface material and the solder point temperature maintained at 85˚C. Based on Bridgelux test setup, values may vary depending on the thermal design of the luminaire and/or the exposed environment to which the product is subjected.

Electrical Characteristics

Table 4: Electrical Characteristics

Part Number [1]	Drive Current (mA)	Forward Voltage (V) [2,3]			Typical Temperature Coefficient of Forward Voltage $\Delta V_f/\Delta T$ (mV/°C)	Typical Thermal Resistance Junction to Solder Point[4] $R_{j\text{-}sp}$ (°C/W)
		Minimum	Typical	Maximum		
BXEN-xxE-21M-3A-00-0-0	150	2.8	3.1	3.4	-1.17	12

Notes for Table 4:

1. The last 6 characters (including hyphens '-') refer to flux bins, forward voltage bins, and color bin options, respectively. "00-0-00" denotes the full distribution of flux, forward voltage, and 7 SDCM color.

   Example: BXEN-30E-21M-3A-00-0-0 refers to the full distribution of flux, forward voltage, and color within a 3000K 7-step ANSI standard chromaticity region with a minimum of 80CRI, 2x1 die configuration, mid power, 3.1V typical forward voltage.
2. Bridgelux maintains a tolerance of ± 0.1V on forward voltage measurements. Voltage minimum and maximum values at the nominal drive current are guaranteed by 100% test.
3. Products tested under pulsed condition (10ms pulse width) at nominal drive current where T_{sp} = 25˚C.
4. Thermal resistance value was calculated using total electrical input power; optical power was not subtracted from input power.

Absolute Maximum Ratings

Table 5: Maximum Ratings

Parameter	Maximum Rating
LED Junction Temperature (T_j)	125˚C
Storage Temperature	-40˚C to +105˚C
Operating Solder Point Temperature (T_{Sp})	-40˚C to +85˚C
Soldering Temperature	260˚C or lower for a maximum of 10 seconds
Maximum Drive Current[3]	150mA
Maximum Peak Pulsed Forward Current[1]	300mA
Maximum Reverse Voltage[2]	-
Moisture Sensitivity Rating	MSL 3
Electrostatic Discharge	2kV HBM. JEDEC-JS-001-HBM and JEDEC-JS-001-2012

Notes for Table 5:

1. Bridgelux recommends a maximum duty cycle of 10% and pulse width of 10 ms when operating LED SMD at maximum peak pulsed current specified. Maximum peak pulsed current indicate values where LED SMD can be driven without catastrophic failures.
2. Light emitting diodes are not designed to be driven in reverse voltage and will not produce light under this condition. Maximum rating provided for reference only.
3. The maximum drive current for LM80 test results is based on the nominal drive current listed.

Product Bin Definitions

Table 6 lists the standard photometric luminous flux bins for Bridgelux SMD 2835 LEDs. Although several bins are listed, product availability in a particular bin varies by production run and by product performance. Not all bins are available in all CCTs.

Table 6: Luminous Flux Bin Definitions at 150mA, T_{sp}=25˚C

Bin Code	Minimum	Maximum	Unit	Condition
2A	50	55	lm	I_F=150mA
2B	55	60		
2C	60	65		
2D	65	70		
2E	70	75		
2F	75	80		
2G	80	85		
2H	85	90		

Note for Table 6:

1. Bridgelux maintains a tolerance of ± 7.5% on luminous flux measurements.

Table 7: Forward Voltage Bin Definition at 150mA, T_{sp}=25˚C

Bin Code	Minimum	Maximum	Unit	Condition
A	2.8	2.9	V	I_F=150mA
B	2.9	3.0		
C	3.0	3.1		
D	3.1	3.2		
E	3.2	3.3		
F	3.3	3.4		

Note for Table 7:

1. Bridgelux maintains a tolerance of ± 0.1V on forward voltage measurements.

Product Bin Definitions

Table 8: 3- and 5-step MacAdam Ellipse Color Bin Definitions

CCT	Color Space	Center Point		Major Axis	Minor Axis	Ellipse Rotation Angle	Color Bin
		X	Y				
2700K	3 SDCM	0.4578	0.4101	0.00810	0.00420	53.70	1
	5 SDCM	0.4578	0.4101	0.01350	0.00700	53.70	1/A/B/C/D
3000K	3 SDCM	0.4338	0.4030	0.00834	0.00408	53.22	1
	5 SDCM	0.4338	0.4030	0.01390	0.00680	53.22	1/A/B/C/D
3500K	3 SDCM	0.4073	0.3917	0.00927	0.00414	54.00	1
	5 SDCM	0.4073	0.3917	0.01545	0.00690	54.00	1/A/B/C/D
4000K	3 SDCM	0.3818	0.3797	0.00939	0.00402	53.72	1
	5 SDCM	0.3818	0.3797	0.01565	0.00670	53.72	1/A/B/C/D
5000K	3 SDCM	0.3447	0.3553	0.00822	0.00354	59.62	1
	5 SDCM	0.3447	0.3553	0.01370	0.00590	59.62	1/A/B/C/D
5700K	3 SDCM	0.3287	0.3417	0.00746	0.00320	59.09	1
	5 SDCM	0.3287	0.3417	0.01243	0.00533	59.09	1/A/B/C/D
6500K	3 SDCM	0.3123	0.3282	0.00669	0.00285	58.57	1
	5 SDCM	0.3123	0.3282	0.01115	0.00475	58.57	1/A/B/C/D

Notes for Table 8:

1. Color binning at T_{sp}=85˚C
2. Bridgelux maintains a tolerance of ± 0.007 on x and y color coordinates in the CIE 1931 color space.

Product Bin Definitions

Figure 1: C.I.E. 1931 Chromaticity Diagram (9 Color Bin Structure, hot-color targeted at T_{sp}=85˚C)

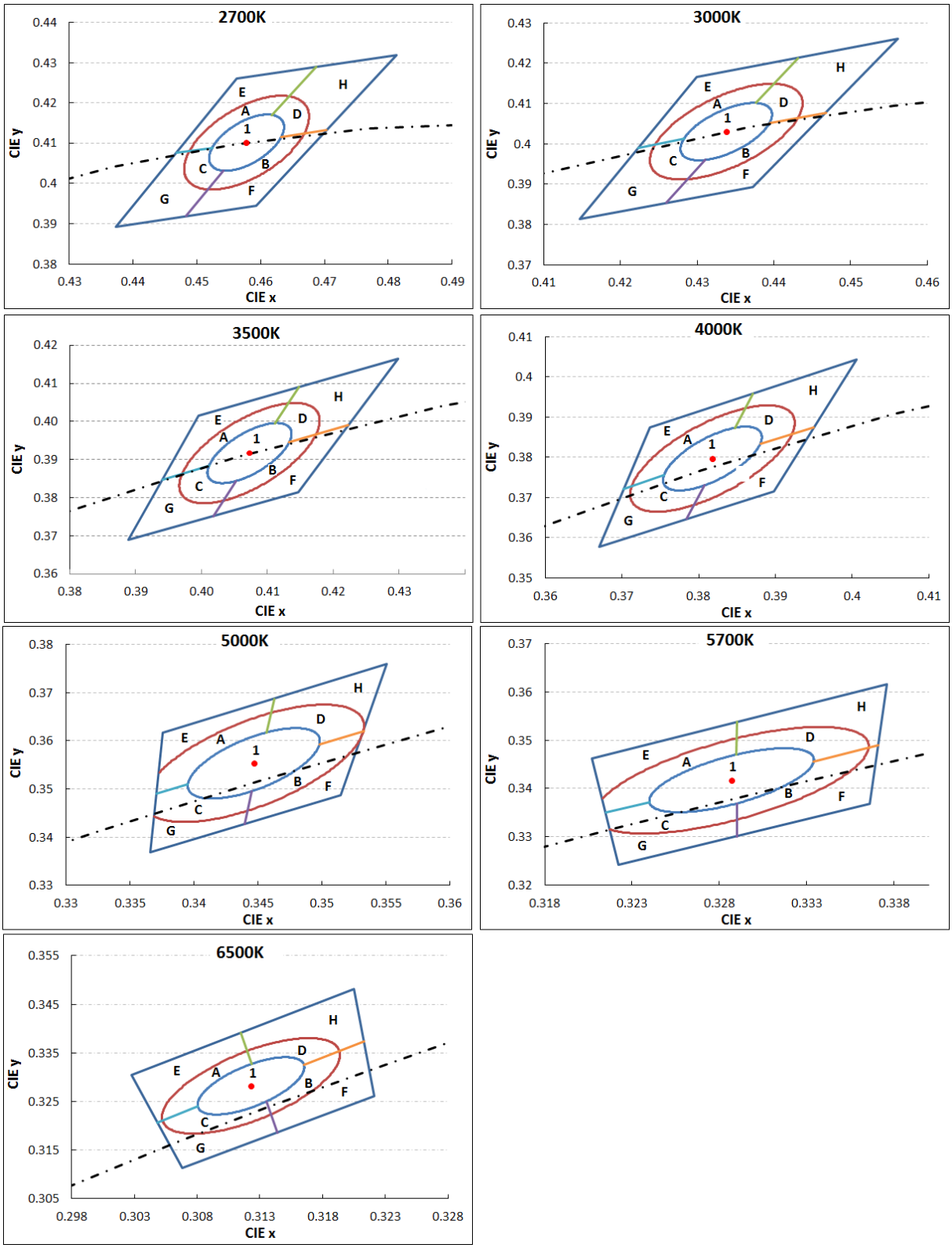

Performance Curves

Figure 2: **Drive Current vs. Voltage (T_{sp}=25˚C)**

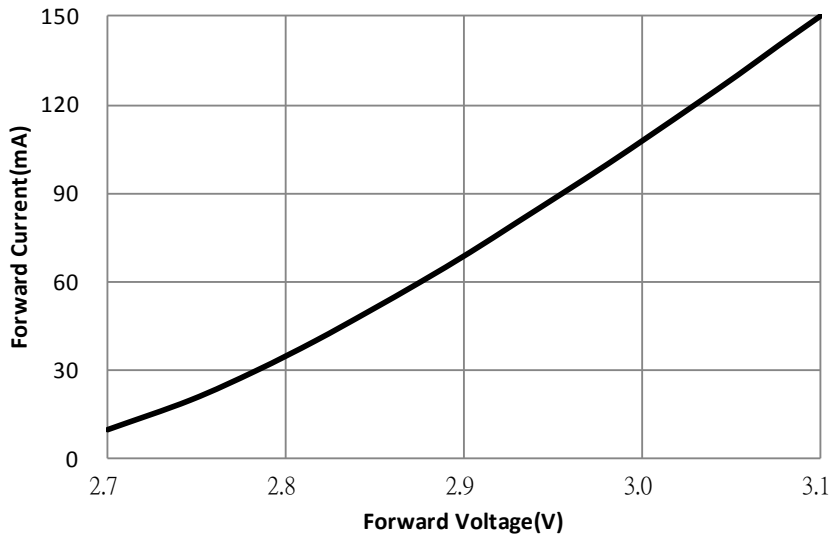

Figure 3: **Typical Relative Luminous Flux vs. Drive Current (T_{sp}=25˚C)**

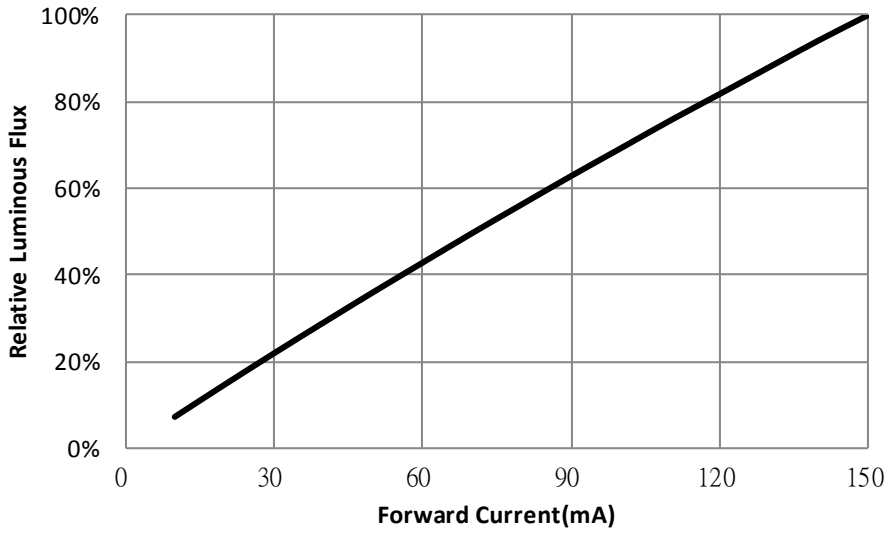

Note for Figure 3:

1. Bridgelux does not recommend driving high power LEDs at low currents. Doing so may produce unpredictable results. Pulse width modulation (PWM) is recommended for dimming effects.

Performance Curves

Figure 4: **Typical Relative Flux vs. Solder Point Temperature**

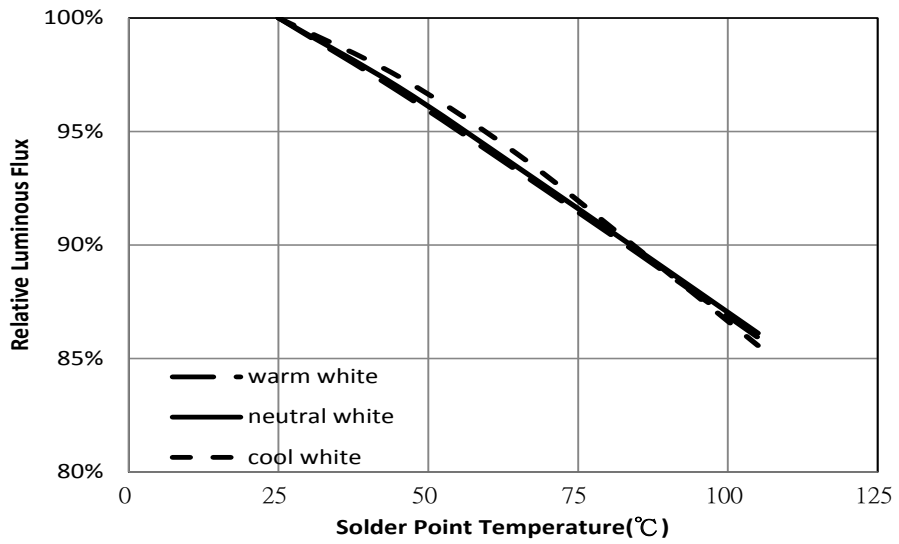

Figure 5: **Typical ccx Shift vs. Solder Point Temperature**

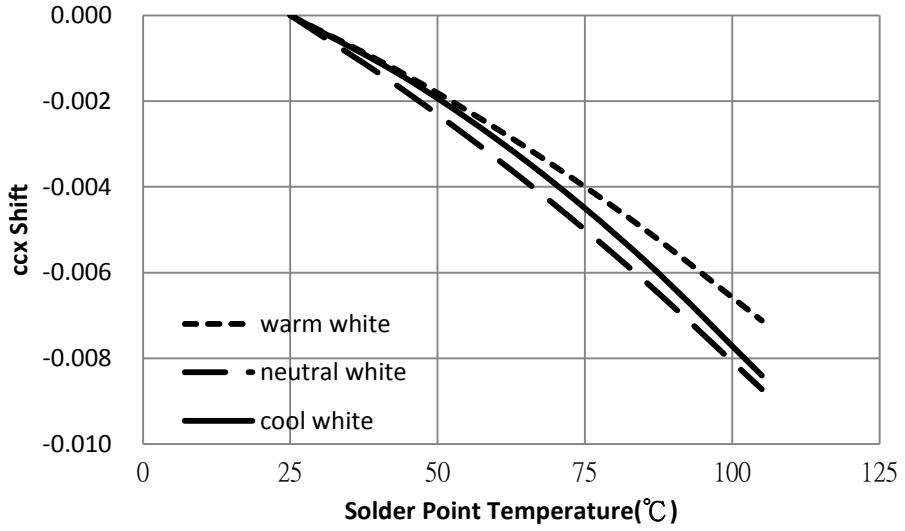

Notes for Figures 4 & 5:

1. Characteristics shown for warm white based on 3000K and 80 CRI.
2. Characteristics shown for neutral white based on 4000K and 80 CRI.
3. Characteristics shown for cool white based on 5000K and 80 CRI.
4. For other color SKUs, the shift in color will vary. Please contact your Bridgelux Sales Representative for more information.

Performance Curves

Figure 6: Typical ccy Shift vs.Solder Point Temperature

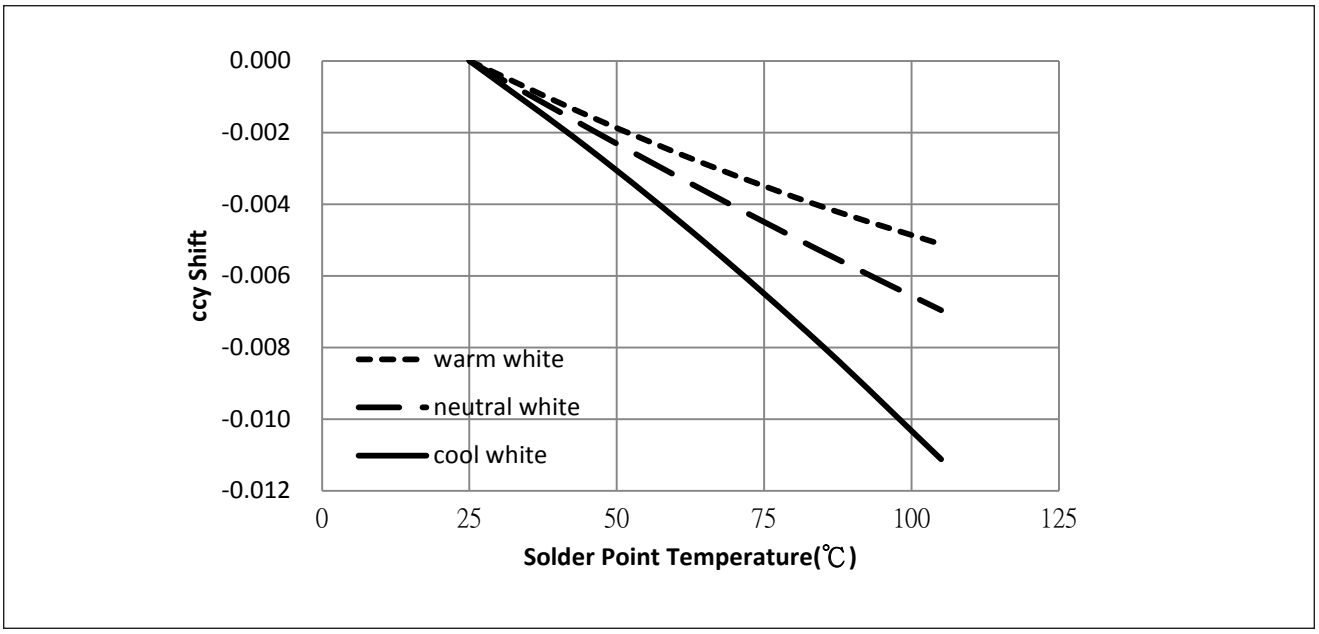

Notes for Figure 6:

1. Characteristics shown for warm white based on 3000K and 80 CRI.
2. Characteristics shown for neutral white based on 4000K and 80 CRI.
3. Characteristics shown for cool white based on 5000K and 80 CRI.
4. For other color SKUs, the shift in color will vary. Please contact your Bridgelux Sales Representative for more information.

Typical Radiation Pattern

Figure 7: **Typical Spatial Radiation Pattern at 150mA, T_{sp}=25˚C**

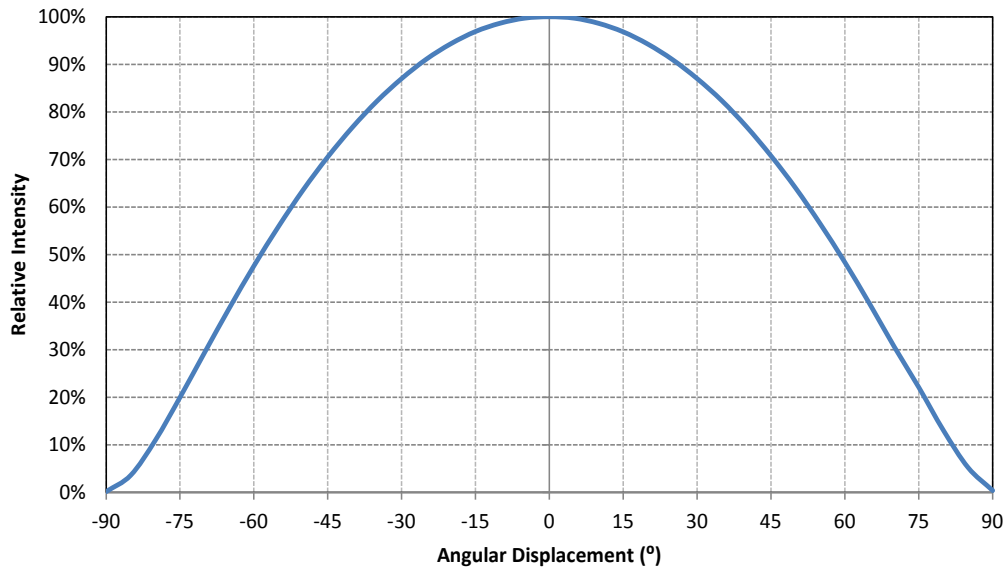

Notes for Figure 7:

1. Typical viewing angle is 118˚.
2. The viewing angle is defined as the off axis angle from the centerline where luminous intensity (Iv) is ½ of the peak value.

Figure 8: **Typical Polar Radiation Pattern at 150mA, T_{sp}=25˚C**

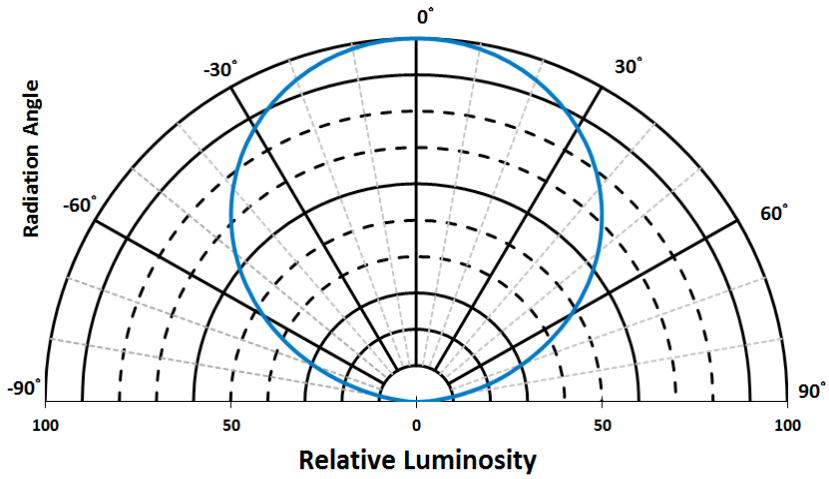

Typical Color Spectrum

Figure 9: Typical Color Spectrum

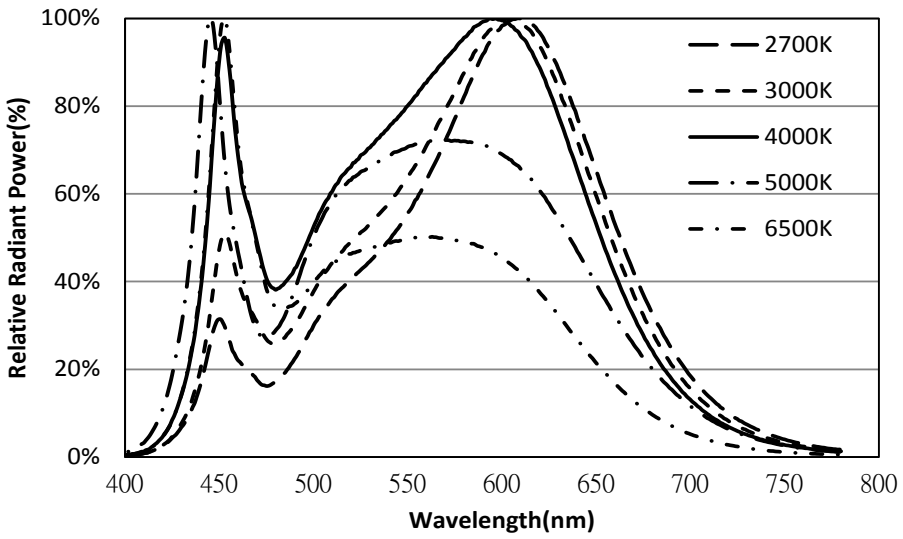

Notes for Figure 9:

1. Color spectra measured at nominal current for Tsp = 25°C
2. Color spectra shown for warm white is 2700K and 80 CRI.
3. Color spectra shown for warm white is 3000K and 80 CRI.
4. Color spectra shown for neutral white is 4000K and 80 CRI.
5. Color spectra shown for cool white is 5000K and 80 CRI.
6. Color spectra shown for cool white is 6500K and 80 CRI.

Mechanical Dimensions

Figure 10: Drawing for SMD 2835

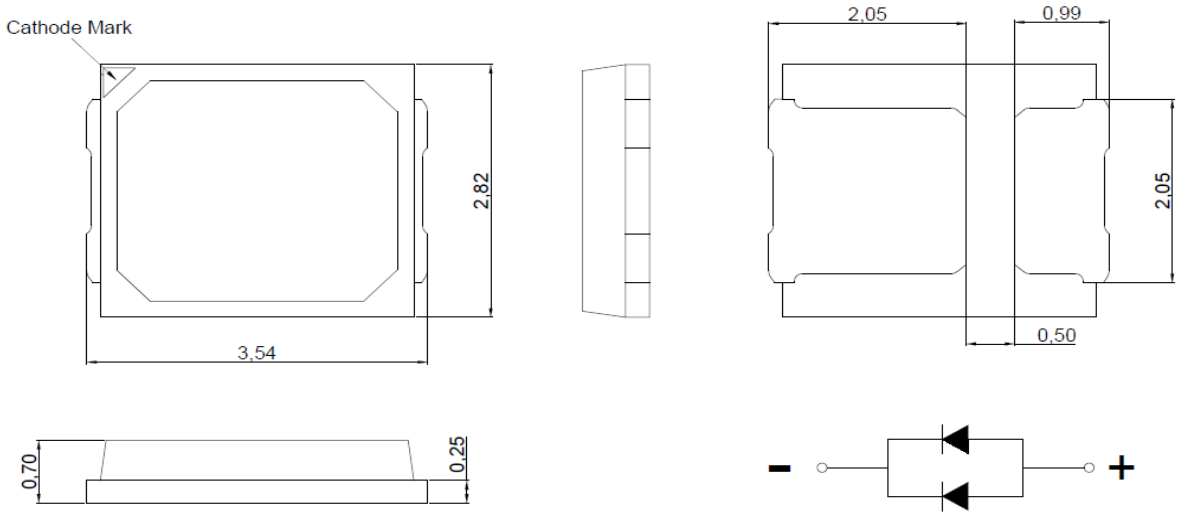

Notes for Figure 10:

1. Drawings are not to scale.
2. Drawing dimensions are in millimeters.
3. Unless otherwise specified, tolerances are ± 0.10mm.

Recommended PCB Soldering Pad Pattern

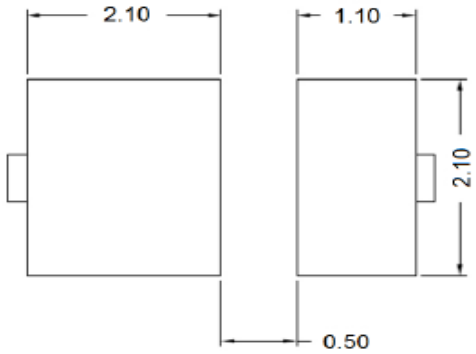

Reliability

Table 9: Reliability Test Items and Conditions

No .	Items	Reference Standard	Test Conditions	Drive Current	Test Duration	Units Failed/Tested
1	Moisture/Reflow Sensitivity	J-STD-020E	T_{sld} = 260˚C, 10sec, Precondition: 60˚C, 60%RH, 168hr	-	3 reflows	0/22
2	Low Temperature Storage	JESD22-A119	T_a=-40˚C	-	1000 hours	0/22
3	High Temperature Storage	JESD22-A103D	T_a= 100˚C	-	1000 hours	0/22
4	Low Temperature Operating Life	JESD22-A108D	T_a=-40˚C	150mA	1000 hours	0/22
5	Temperature Humidity Operating Life	JESD22-A101C	T_{sp}=85˚C, RH=85%	150mA	1000 hours	0/22
6	High Temperature Operating Life	JESD22-A108D	T_{sp}=85˚C	150mA	1000 hours	0/22
7	Power switching	IEC62717:2014	T_{sp}= 85˚C 30 sec on, 30 sec off	150mA	30000 cycles	0/22
8	Thermal Shock	JESD22-A106B	T_a=-40˚C ~100˚C; Dwell : 15min; Transfer: 10sec	-	200 cycles	0/22
9	Temperature Cycle	JESD22-A104E	T_a=-40˚C ~100˚C; Dwell at extreme temperature: 15min; Ramp rate < 105˚C/min	-	200 cycles	0/22
10	Electrostatic Discharge	JS-001-2012	HBM, 2KV, 1.5kΩ, 100pF, Alternately positive or negative	-	-	0/22

Passing Criteria

Item	Symbol	Test Condition	Passing Criteria
Forward Voltage	Vf	150mA	ΔVf<10%
Luminous Flux	Fv	150mA	ΔFv<30%
Chromaticity Coordinates	(x, y)	150mA	Δu'v'<0.007

Notes for Table 9:

1. Measurements are performed after allowing the LEDs to return to room temperature
2. T_{sld} : reflow soldering temperature; T_a : ambient temperature

Reflowing Characteristics

Figure 11 : Reflow Profile

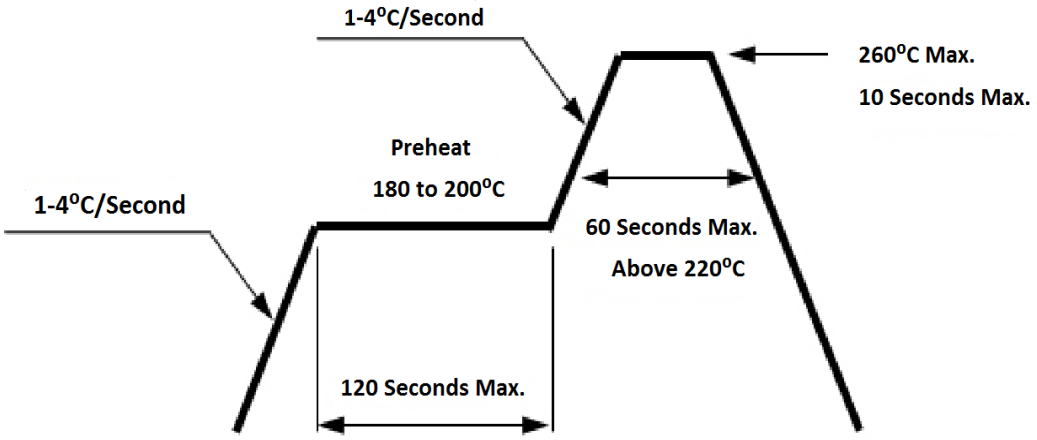

Profile Feature	Lead Free Assembly
Preheat: Temperature Range	180˚C – 200˚C
Preheat: Time (Maximum)	120 seconds
Peak Temperature	260˚C
Soldering Time (Maximum)	10 seconds
Allowable Reflow Cycles	2

Figure 12 : Pick and Place

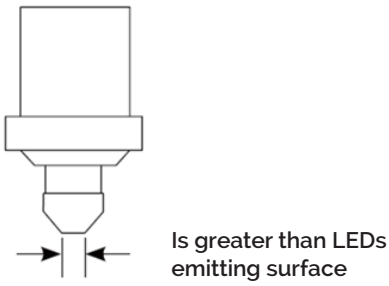

Note for Figure 12:

1. When using a pick and place machine, choose a nozzle that has a larger diameter than the LED's emitting surface. Using a Pick-and-Place nozzle with a smaller diameter than the size of the LEDs emitting surface will cause damage and may also cause the LED to not illuminate.

Packaging

Figure 13: Emitter Reel Drawings

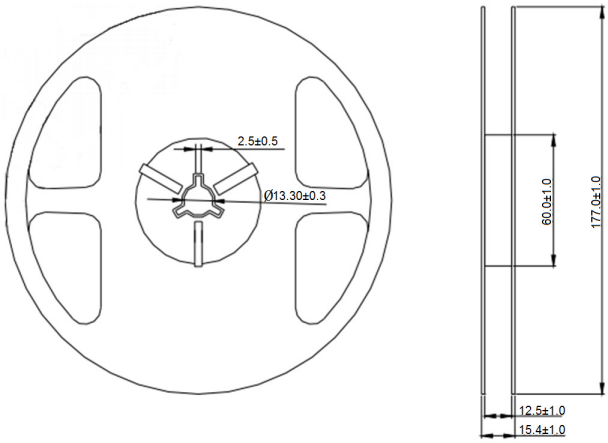

Note for Figure 13:

1. Drawings are not to scale. Drawing dimensions are in millimeters.

Figure 14: Emitter Tape Drawings

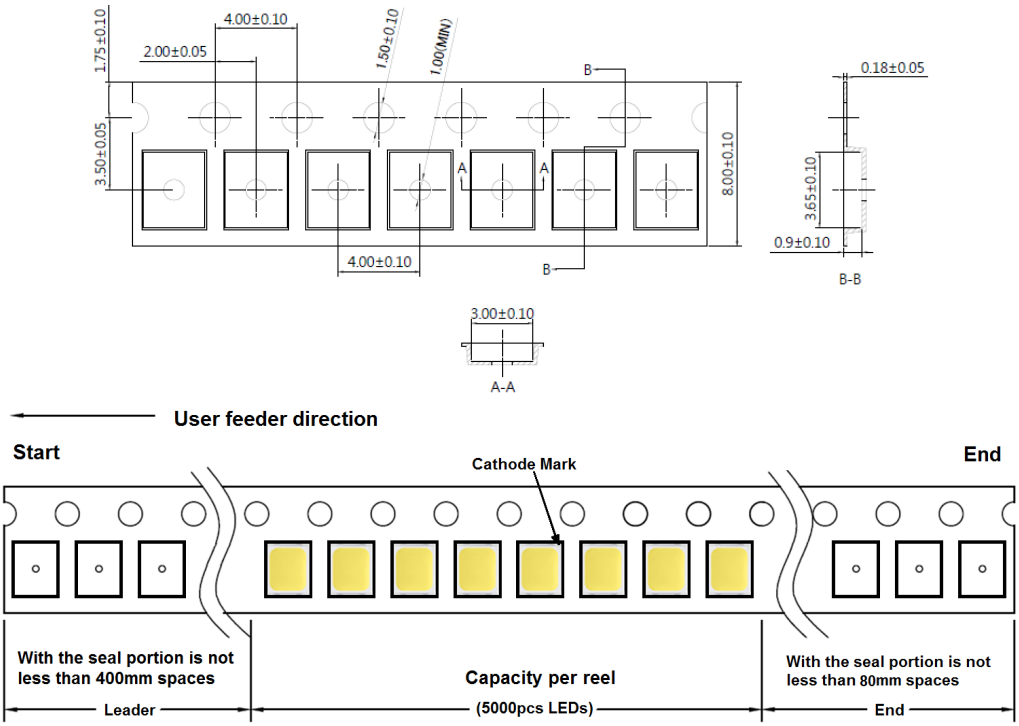

Note for Figure 14:

1. Drawings are not to scale. Drawing dimensions are in millimeters.

Packaging

Figure 15: Emitter Reel Packaging Drawings

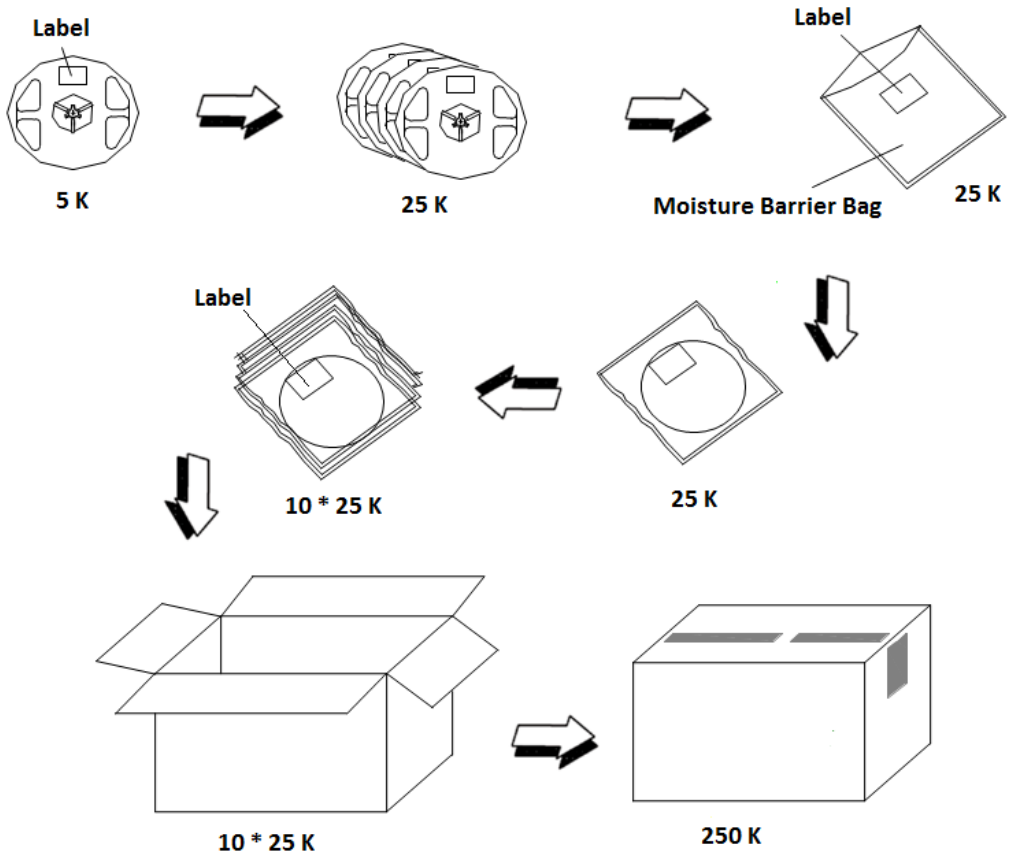

Note for Figure 15:

1. Drawings are not to scale.

Design Resources

Please contact your Bridgelux sales representative for assistance.

Precautions

CAUTION: CHEMICAL EXPOSURE HAZARD

Exposure to some chemicals commonly used in luminaire manufacturing and assembly can cause damage to the LED emitter. Please consult Bridgelux Application Note AN51 for additional information.

CAUTION: EYE SAFETY

Eye safety classification for the use of Bridgelux SMD LED emitter is in accordance with IEC specification EN62471: Photobiological Safety of Lamps and Lamp Systems. SMD LED emitters are classified as Risk Group 1 when operated at or below the maximum drive current. Please use appropriate precautions. It is important that employees working with LEDs are trained to use them safely.

CAUTION: RISK OF BURN

Do not touch the SMD LED emitter during operation. Allow the emitter to cool for a sufficient period of time before handling. The SMD LED emitter may reach elevated temperatures such that could burn skin when touched.

CAUTION

CONTACT WITH LIGHT EMITTING SURFACE (LES)

Avoid any contact with the LES. Do not touch the LES of the emitter or apply stress to the LES (yellow phosphor resin area). Contact may cause damage to the emitter

Optics and reflectors must not be mounted in contact with the LES (yellow phosphor resin area).

Disclaimers

MINOR PRODUCT CHANGE POLICY

The rigorous qualification testing on products offered by Bridgelux provides performance assurance. Slight cosmetic changes that do not affect form, fit, or function may occur as Bridgelux continues product optimization.

STANDARD TEST CONDITIONS

Unless otherwise stated, LED emitter testing is performed at the nominal drive current.

About Bridgelux: We Build Light That Transforms

At Bridgelux, we help companies, industries and people experience the power and possibility of light. Since 2002, we've designed LED solutions that are high performing, energy efficient, cost effective and easy to integrate. Our focus is on light's impact on human behavior, delivering products that create better environments, experiences and returns—both experiential and financial. And our patented technology drives new platforms for commercial and industrial luminaires.

For more information about the company, please visit
bridgelux.com
twitter.com/Bridgelux
facebook.com/Bridgelux
youtube.com/user/Bridgelux
WeChat ID: BridgeluxInChina

46430 Fremont Boulevard
Fremont, CA 94538 USA
Tel (925) 583-8400
Fax (925) 583-8410
www.bridgelux.com

© 2016 Bridgelux, Inc. All rights reserved 2016. Product specifications are subject to change without notice. Bridgelux and the Bridgelux stylized logo design are registered trademarks of Bridgelux, Inc. All other trademarks are the property of their respective owners.